SALSA WARROAD - FRONT TRIANGLE FRAME BAG GUIDE

- Unless noted all dimensions are in millimeters
- All dimensions are ±2mm
- Drawing size is 68 x 44", scale 1:1
- Scale drawing 1:4 (25%) to print on 11 x 17" paper

127 MM

5 IN

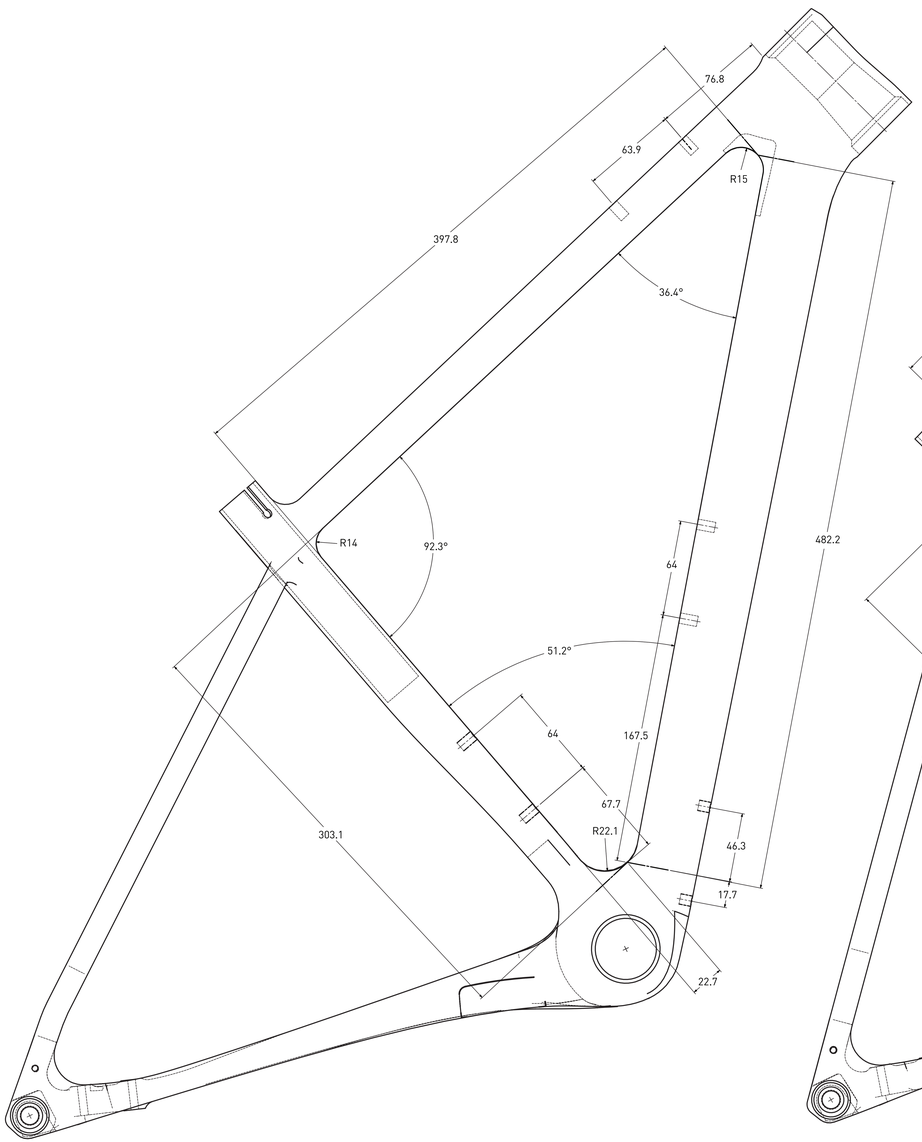

50.5 cm

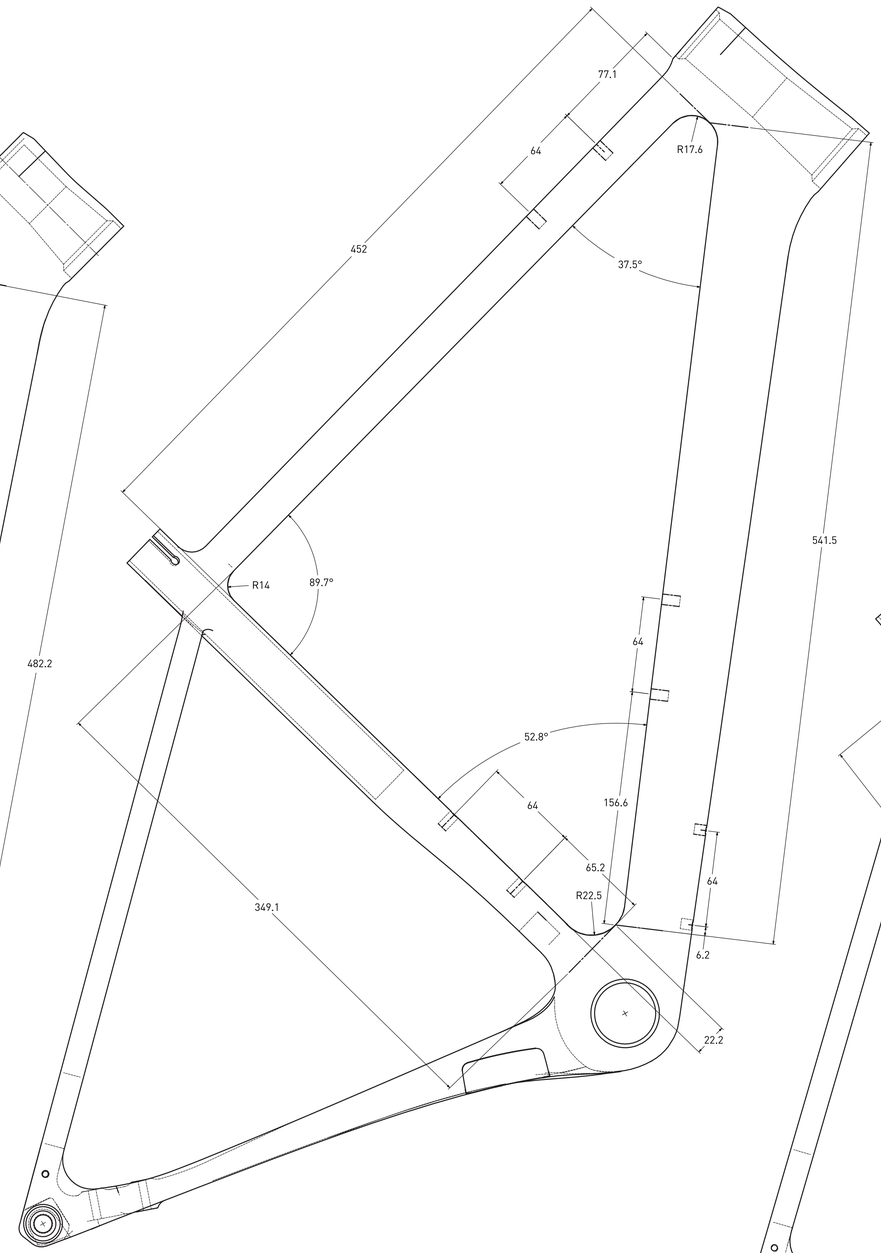

52.5 cm

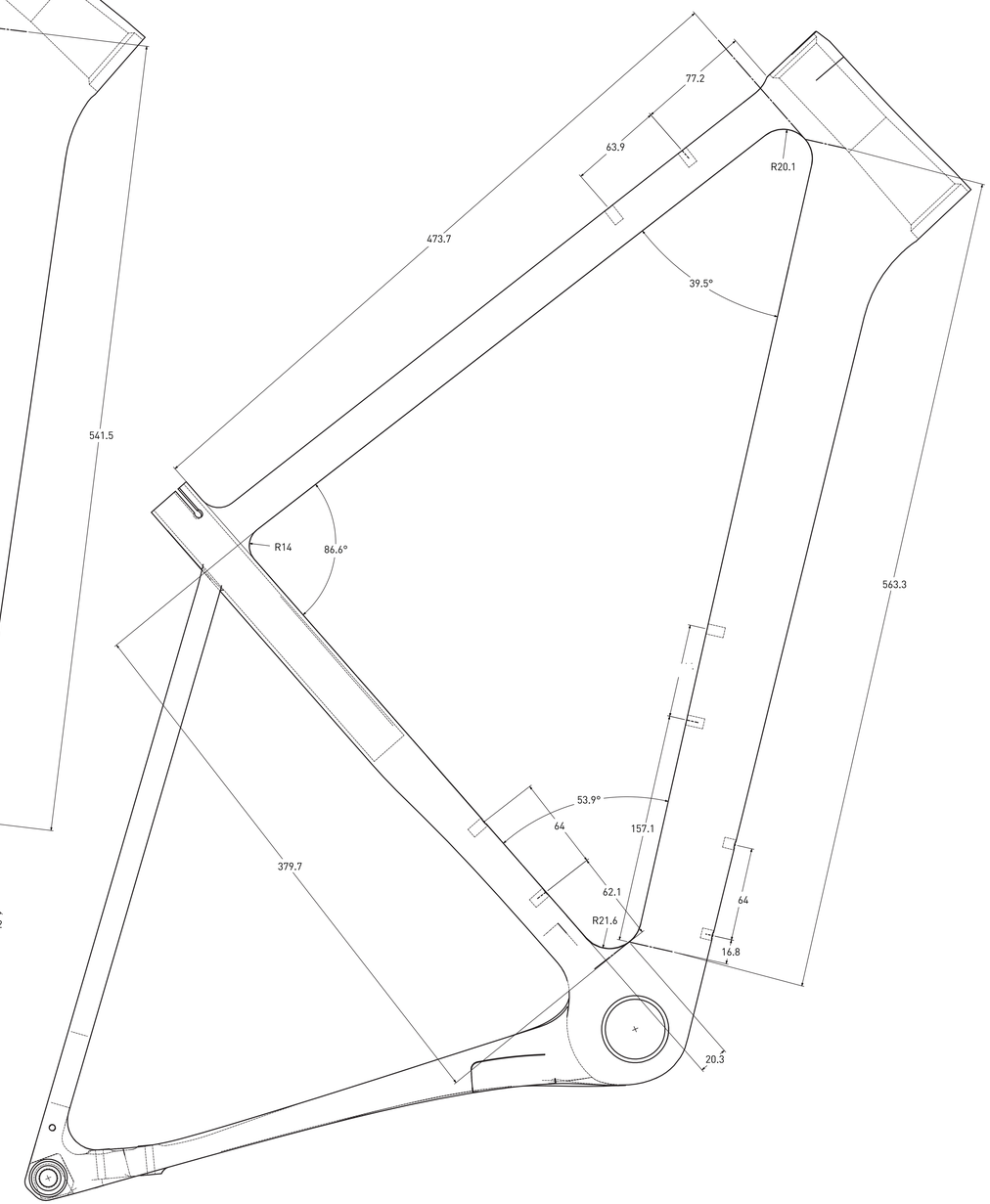

54.5 cm

SALSA WARROAD - FRONT TRIANGLE FRAME BAG GUIDE

- Unless noted all dimensions are in millimeters
- All dimensions are ±2mm
- Drawing size is 68 x 44", scale 1:1
- Scale drawing 1:4 (25%) to print on 11 x 17" paper

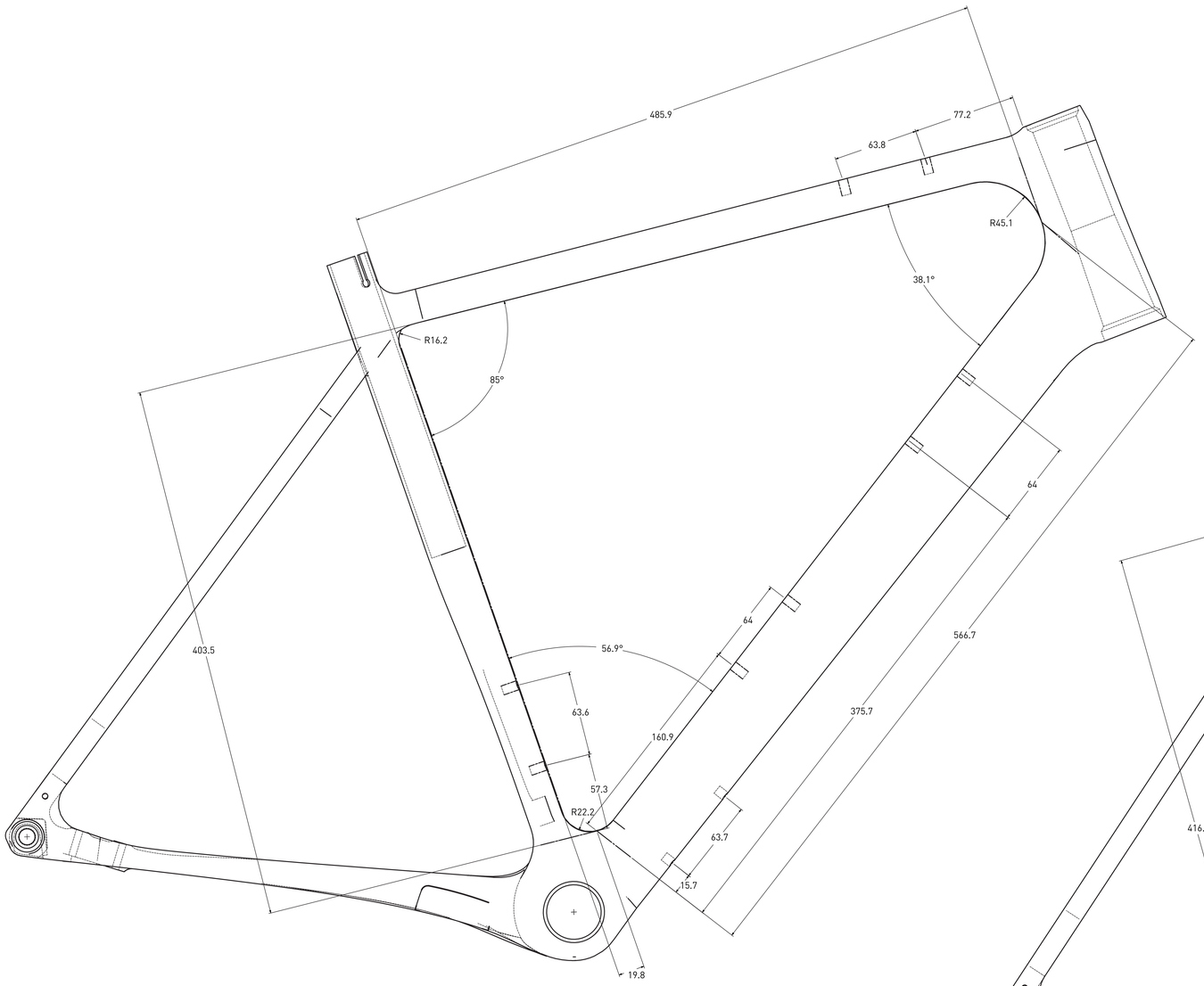

56 cm

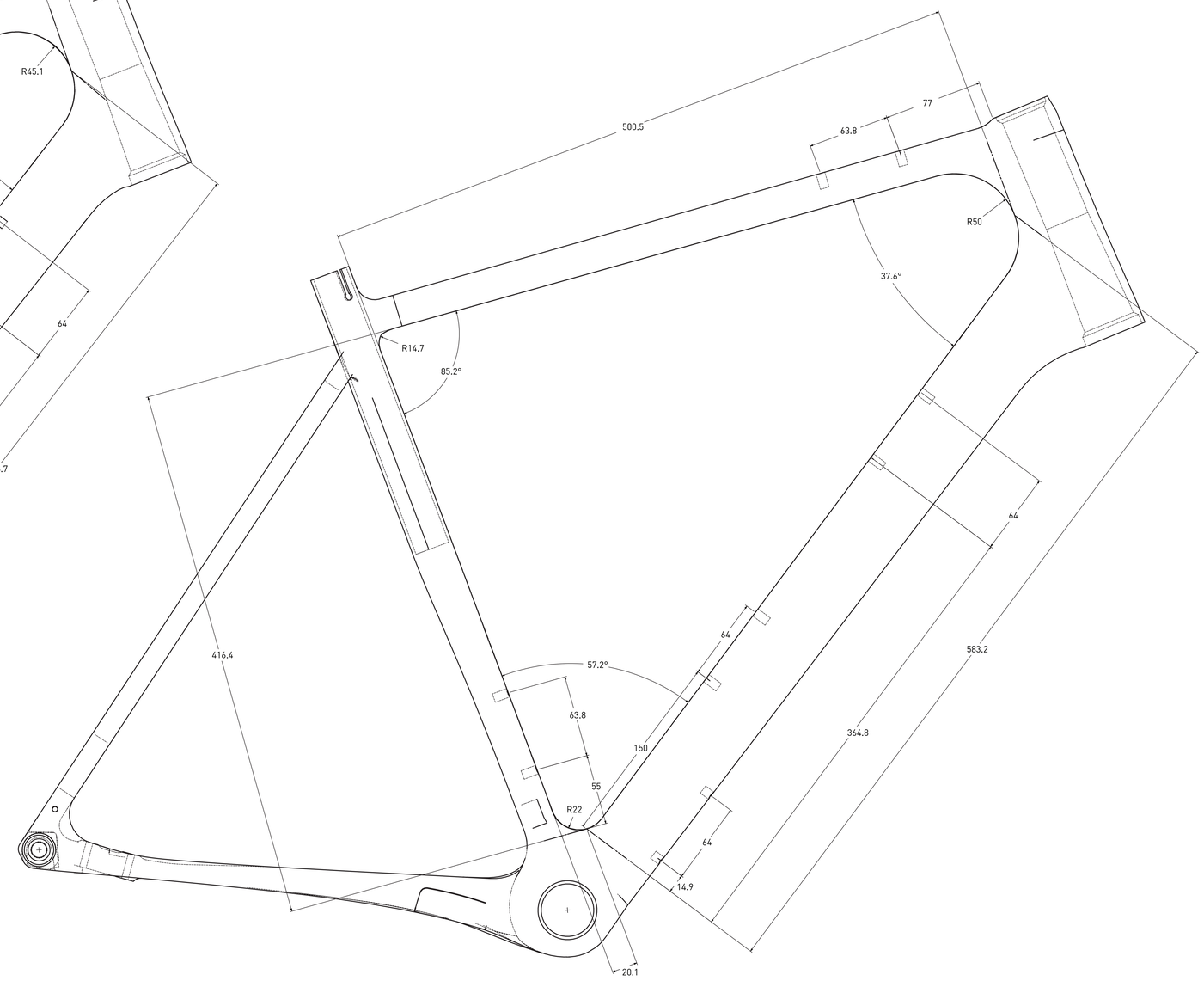

57.5 cm

SALSA WARROAD - FRONT TRIANGLE FRAME BAG GUIDE

- Unless noted all dimensions are in millimeters
- All dimensions are ±2mm
- Drawing size is 68 x 44", scale 1:1
- Scale drawing 1:4 (25%) to print on 11 x 17" paper

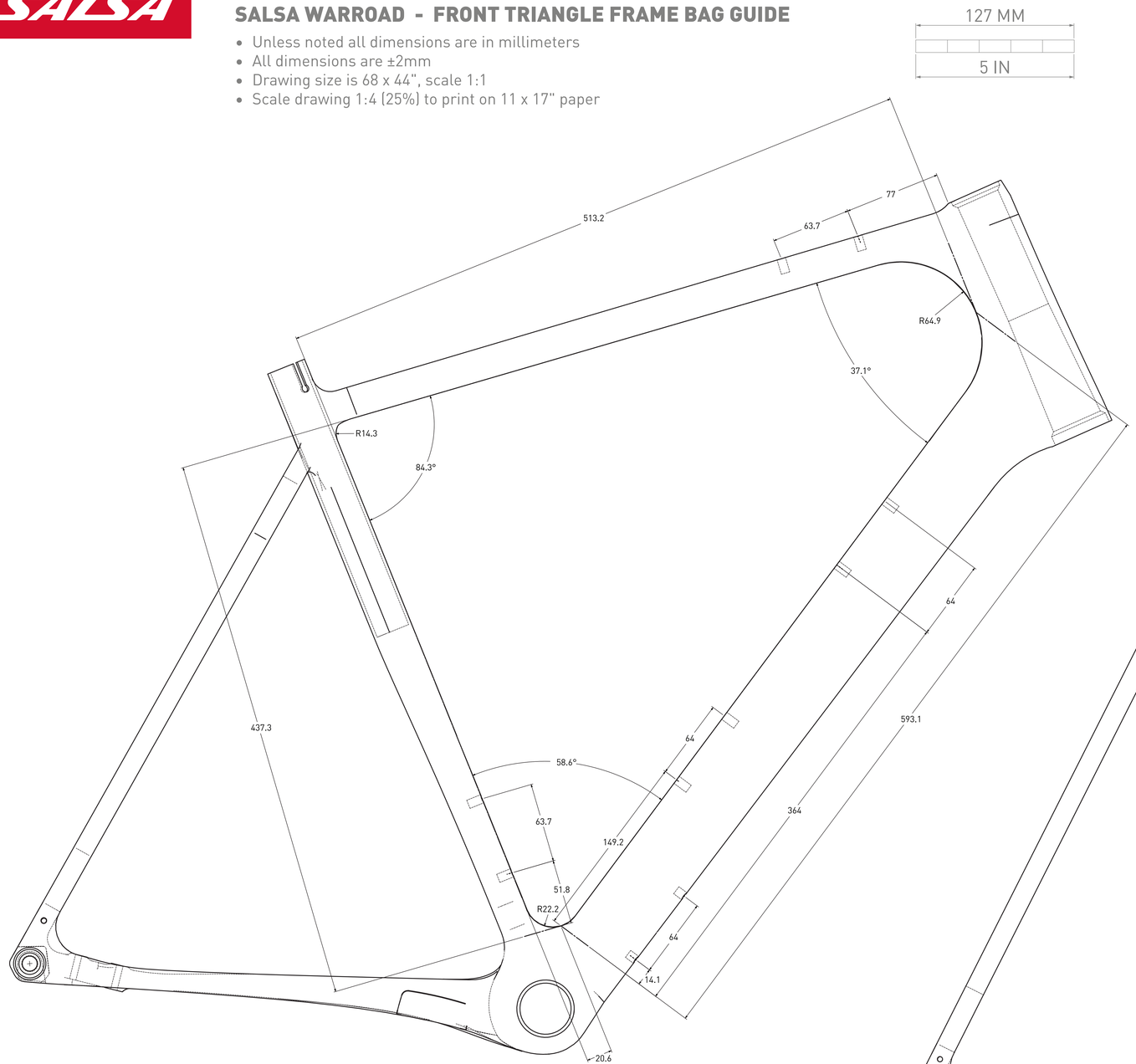

59 cm

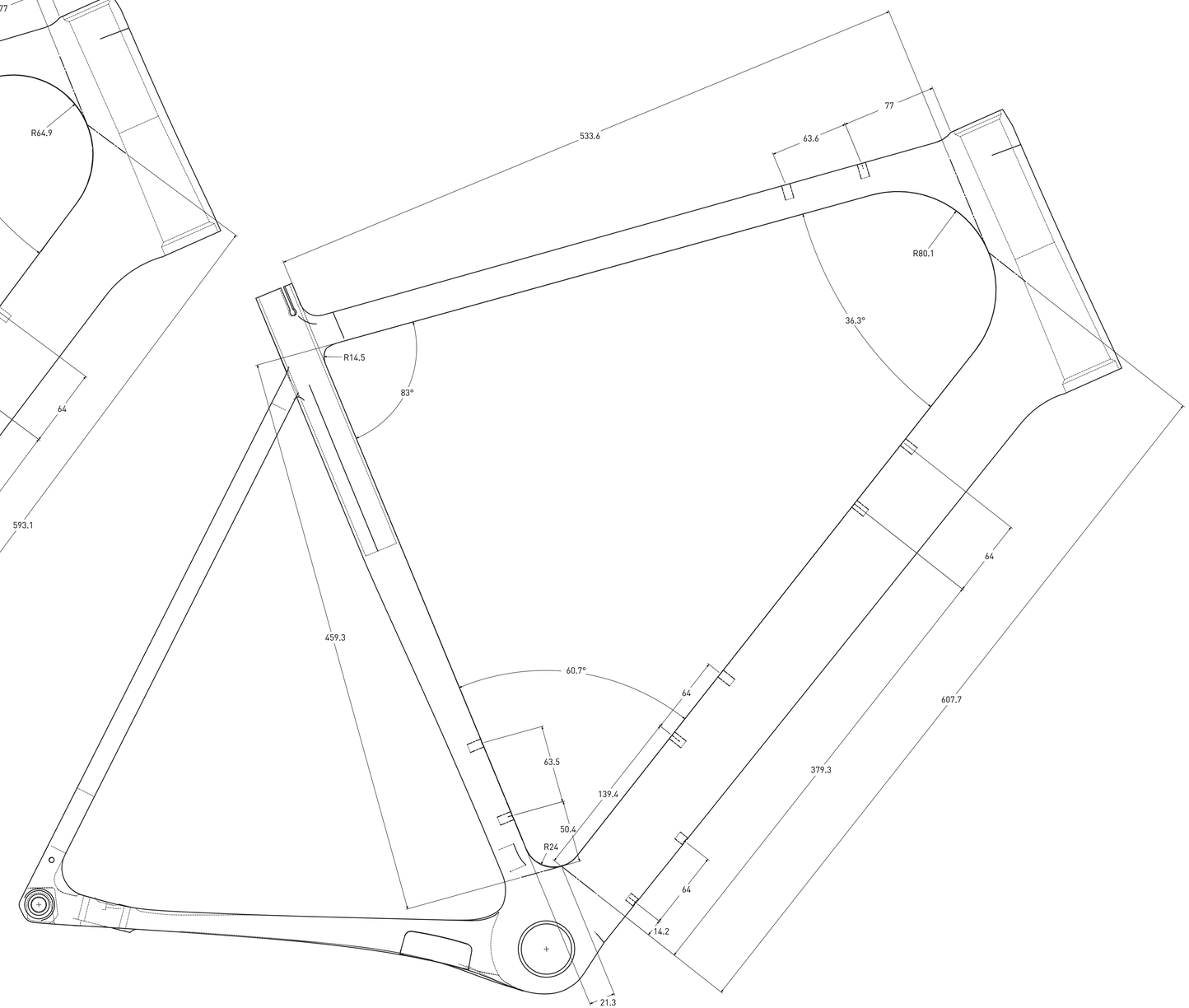

61 cm

470236 3/22